Iambic Keyer based on K4ICY Minty Keyer
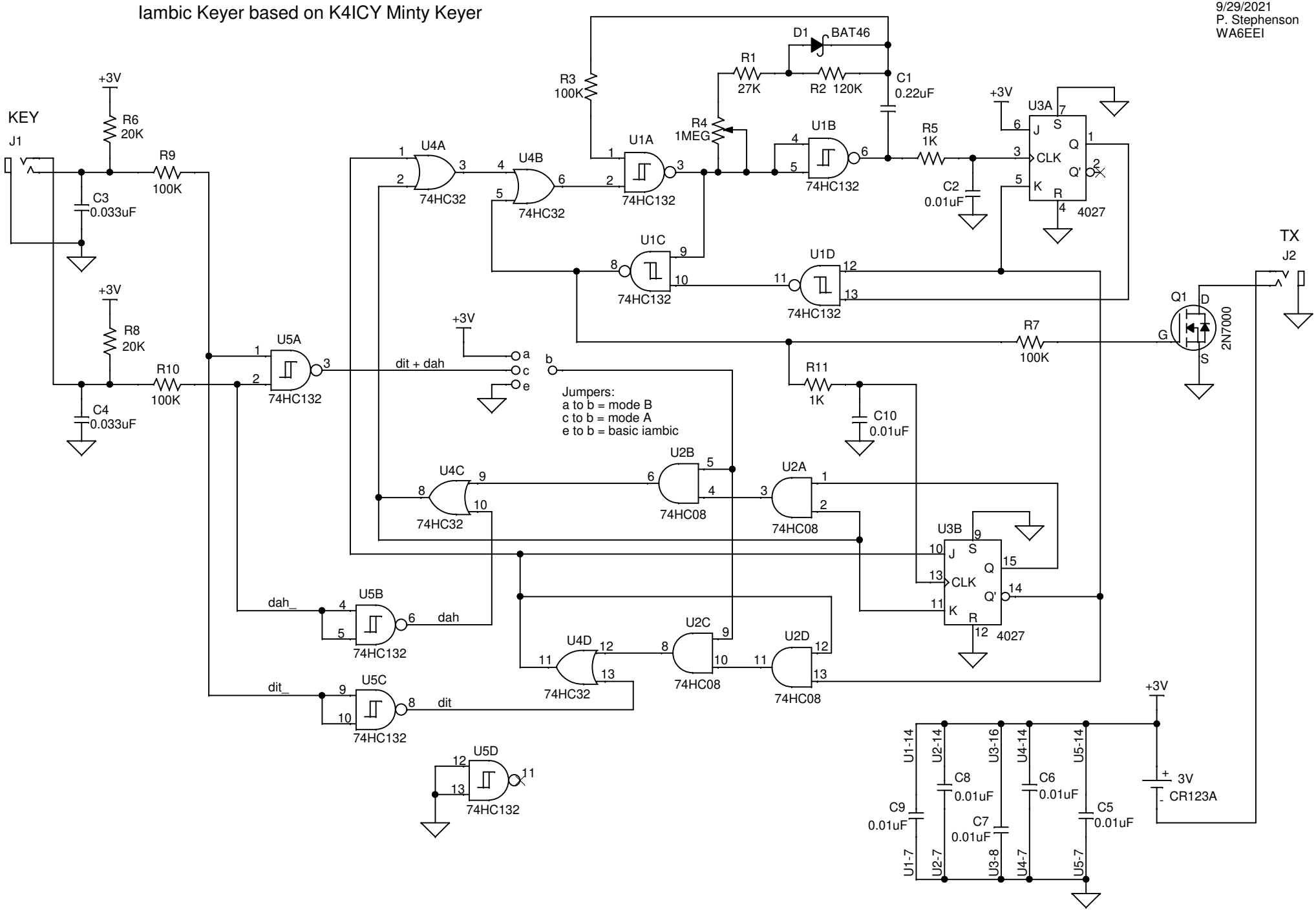
9/29/2021
P. Stephenson
WA6EEI